KFxxB

Very low drop voltage regulators with inhibit

Features

- Very low dropout voltage (0.4 V)
- Very low quiescent current (typ. 50 µA in OFF mode, 500 µA in ON mode)
- Output current up to 500 mA
- Logic-controlled electronic shutdown
- Output voltages of 1.5; 2.5; 3.3; 4; 5; 8 V
- Internal current and thermal limit
- Only 2.2 µF for stability
- Available in ± 2 % accuracy at 25 °C
- Supply voltage rejection: 70 db (typ.)
- Temperature range: -40 to 125 °C

SO-8 DPAK

Description

The KFxx series are very low drop regulators available in SO-8 package and in a wide range of output voltages.

The very low drop voltage (0.4 V) and the very low quiescent current make them particularly

suitable for low noise, low power applications and specially in battery powered systems.

A shutdown logic control function is available (pin 5, TTL compatible). This means that when the device is used as a local regulator, it is possible to put a part of the board in standby, decreasing the total power consumption. It requires only a 2.2 µF capacitor for stability allowing space and cost saving.

Table 1. Device summary

Part numbers	
KF15B	KF40B
KF25B	KF50B
KF33B	KF80B

Contents

1 Diagram 3

2 Pin configuration 4

3 Maximum ratings 5

4 Electrical characteristics 6

5 Typical performance characteristics 12

6 Package mechanical data 13

7 Order codes 18

8 Revision history 19

1 Diagram

Figure 1. Schematic diagram

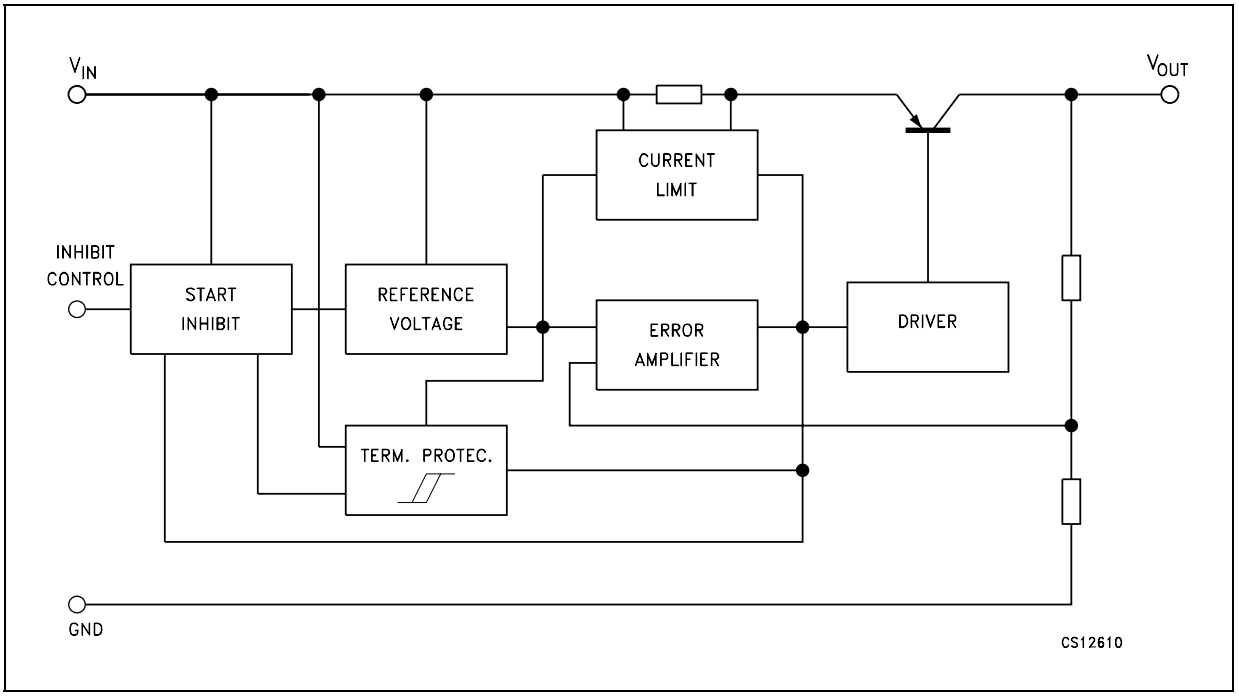

2 Pin configuration

Figure 2. Pin connections (top view)

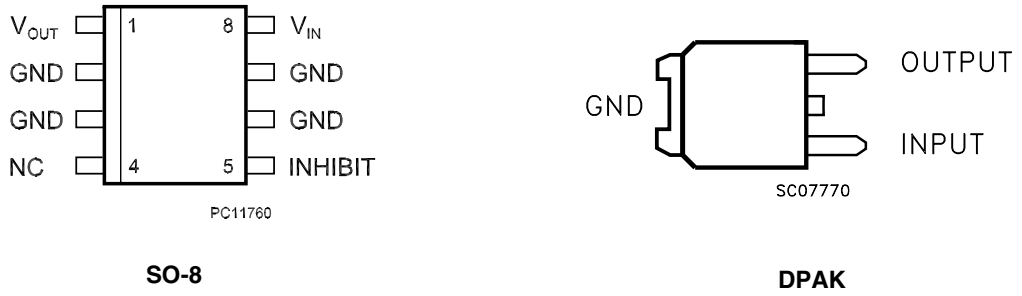

3 Maximum ratings

Table 2. Absolute maximum ratings

Symbol	Parameter	Value	Unit
V_I	DC input voltage	-0.5 to 20	V
I_O	Output current	Internally Limited	
P_{TOT}	Power dissipation	Internally Limited	
T_{STG}	Storage temperature range	-40 to 150	°C
T_{OP}	Operating junction temperature range	-40 to 125	°C

Note: Absolute maximum ratings are those values beyond which damage to the device may occur. Functional operation under these condition is not implied.

Table 3. Thermal data

Symbol	Parameter	DPAK	SO-8	Unit
R_{thJC}	Thermal resistance junction-case	8	20	°C/W

Figure 3. Test circuit

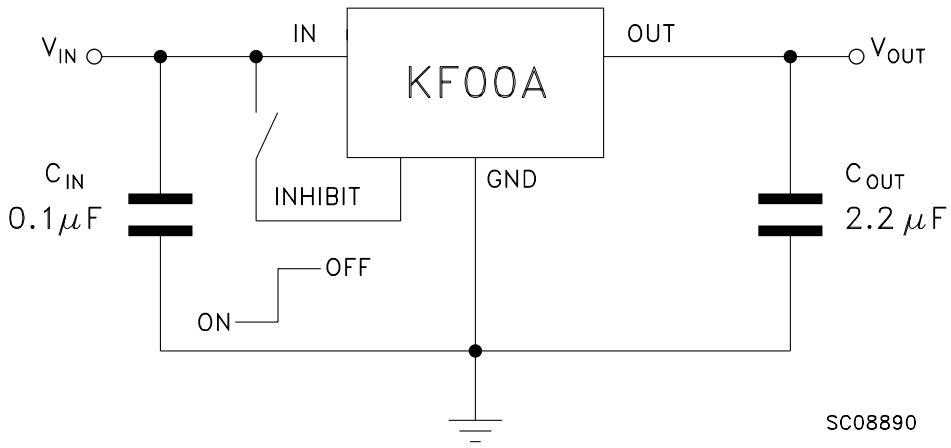

4 Electrical characteristics

Table 4. Electrical characteristics for KF15 (refer to the test circuits, T_J = 25 °C, C_I = 0.1 µF, C_O = 2.2 µF unless otherwise specified.)

Symbol	Parameter	Test conditions		Min.	Typ.	Max.	Unit
V_O	Output voltage	I_O = 50 mA, V_I = 3.5 V		1.47	1.5	1.53	V
		I_O = 50 mA, V_I = 3.5 V, T_a = -25 to 85°C		1.44		1.56	
V_I	Operating input voltage	I_O = 500 mA		2.5		20	V
I_O	Output current limit				1		A
ΔV_O	Line regulation	V_I = 2.5 to 20 V, I_O = 5 mA			2	12	mV
ΔV_O	Load regulation	V_I = 2.8 V, I_O = 5 to 500 mA			2	50	mV
I_d	Quiescent current	V_I = 2.5 to 20V, I_O = 0mA	ON MODE		0.5	1	mA
		V_I = 2.8 to 20V, I_O=500mA				12	
		V_I = 6 V	OFF MODE		50	100	µA
SVR	Supply voltage rejection	I_O = 5 mA, V_I = 3.5 ± 1 V	f = 120 Hz		82		dB
			f = 1 kHz		77		
			f = 10 kHz		60		
eN	Output noise voltage	B = 10 Hz to 100 kHz			50		µV
V_d	Dropout voltage	I_O = 200 mA			1		V
V_{IL}	Control input logic low	T_a = -40 to 125°C				0.8	V
V_{IH}	Control input logic high	T_a = -40 to 125°C		2			V
I_I	Control input current	V_I = 6 V, V_C = 6 V			10		µA
C_O	Output bypass capacitance	ESR = 0.1 to 10 Ω, I_O = 0 to 500 mA		2	10		µF

Table 5. Electrical characteristics for KF25 (refer to the test circuits, T_J = 25 °C, C_I = 0.1 µF, C_O = 2.2 µF unless otherwise specified.)

Symbol	Parameter	Test conditions		Min.	Typ.	Max.	Unit
V_O	Output voltage	I_O = 50 mA, V_I = 4.5 V		2.45	2.5	2.55	V
		I_O = 50 mA, V_I = 4.5 V, T_a = -25 to 85°C		2.4		2.6	
V_I	Operating input voltage	I_O = 500 mA				20	V
I_O	Output current limit				1		A
ΔV_O	Line regulation	V_I = 3.5 to 20 V, I_O = 5 mA			2	12	mV
ΔV_O	Load regulation	V_I = 3.8 V, I_O = 5 to 500 mA			2	50	mV
I_d	Quiescent current	V_I = 3.5 to 20V, I_O = 0mA	ON MODE		0.5	1	mA
		V_I = 3.8 to 20V, I_O=500mA				12	
		V_I = 6 V	OFF MODE		50	100	µA
SVR	Supply voltage rejection	I_O = 5 mA, V_I = 4.5 ± 1 V	f = 120 Hz		82		dB
			f = 1 kHz		77		
			f = 10 kHz		60		
eN	Output noise voltage	B = 10 Hz to 100 KHz			50		µV
V_d	Dropout voltage	I_O = 200 mA			0.2	0.35	V
		I_O = 500 mA			0.4	0.7	
V_{IL}	Control input logic low	T_a = -40 to 125°C				0.8	V
V_{IH}	Control input logic high	T_a = -40 to 125°C		2			V
I_I	Control input current	V_I = 6 V, V_C = 6 V			10		µA
C_O	Output bypass capacitance	ESR = 0.1 to 10 Ω, I_O = 0 to 500 mA		2	10		µF

Table 6. Electrical characteristics for KF33 (refer to the test circuits, T_J = 25 °C, C_I = 0.1 µF, C_O = 2.2 µF unless otherwise specified.)

Symbol	Parameter	Test conditions		Min.	Typ.	Max.	Unit
V_O	Output voltage	I_O = 50 mA, V_I = 5.3 V		3.234	3.3	3.366	V
		I_O = 50 mA, V_I = 5.3 V, T_a = -25 to 85°C		3.168		3.432	
V_I	Operating input voltage	I_O = 500 mA				20	V
I_O	Output current limit				1		A
ΔV_O	Line regulation	V_I = 4.3 to 20 V, I_O = 5 mA			2	12	mV
ΔV_O	Load regulation	V_I = 4.6 V, I_O = 5 to 500 mA			2	50	mV
I_d	Quiescent current	V_I = 4.3 to 20V, I_O = 0mA	ON MODE		0.5	1	mA
		V_I = 4.6 to 20V, I_O=500mA				12	
		V_I = 6 V	OFF MODE		50	100	µA
SVR	Supply voltage rejection	I_O = 5 mA, V_I = 5.3 ± 1 V	f = 120 Hz		80		dB
			f = 1 kHz		75		
			f = 10 kHz		60		
eN	Output noise voltage	B = 10 Hz to 100 KHz			50		µV
V_d	Dropout voltage	I_O = 200 mA			0.2	0.35	V
		I_O = 500 mA			0.4	0.7	
V_{IL}	Control input logic low	T_a = -40 to 125°C				0.8	V
V_{IH}	Control input logic high	T_a = -40 to 125°C		2			V
I_I	Control input current	V_I = 6 V, V_C = 6 V			10		µA
C_O	Output bypass capacitance	ESR = 0.1 to 10 Ω, I_O = 0 to 500 mA		2	10		µF

Table 7. Electrical characteristics for KF40 (refer to the test circuits, T_J = 25 °C, C_I = 0.1 µF, C_O = 2.2 µF unless otherwise specified.)

Symbol	Parameter	Test conditions		Min.	Typ.	Max.	Unit
V_O	Output voltage	I_O = 50 mA, V_I = 6 V		3.92	4	4.08	V
		I_O = 50 mA, V_I = 6 V, T_a = -25 to 85°C		3.84		4.16	
V_I	Operating input voltage	I_O = 500 mA				20	V
I_O	Output current limit				1		A
ΔV_O	Line regulation	V_I = 5 to 20 V, I_O = 5 mA			3	18	mV
ΔV_O	Load regulation	V_I = 5.3 V, I_O = 5 to 500 mA			2	50	mV
I_d	Quiescent current	V_I = 5 to 20V, I_O = 0mA	ON MODE		0.5	1	mA
		V_I = 5.3 to 20V, I_O=500mA				12	
		V_I = 6 V	OFF MODE		50	100	µA
SVR	Supply voltage rejection	I_O = 5 mA, V_I = 6 ± 1 V	f = 120 Hz		78		dB
			f = 1 kHz		73		
			f = 10 kHz		60		
eN	Output noise voltage	B = 10 Hz to 100 KHz			50		µV
V_d	Dropout voltage	I_O = 200 mA			0.2	0.35	V
		I_O = 500 mA			0.4	0.7	
V_{IL}	Control input logic low	T_a = -40 to 125°C				0.8	V
V_{IH}	Control input logic high	T_a = -40 to 125°C		2			V
I_I	Control input current	V_I = 6 V, V_C = 6 V			10		µA
C_O	Output bypass capacitance	ESR = 0.1 to 10 Ω, I_O = 0 to 500 mA		2	10		µF

Table 8. Electrical characteristics for KF50 (refer to the test circuits, T_J = 25 °C, C_I = 0.1 µF, C_O = 2.2 µF unless otherwise specified.)

Symbol	Parameter	Test conditions		Min.	Typ.	Max.	Unit
V_O	Output voltage	I_O = 50 mA, V_I = 7 V		4.9	5	5.1	V
		I_O = 50 mA, V_I = 7 V, T_a = -25 to 85°C		4.8		5.2	
V_I	Operating input voltage	I_O = 500 mA				20	V
I_O	Output current limit				1		A
ΔV_O	Line regulation	V_I = 6 to 20 V, I_O = 5 mA			3	18	mV
ΔV_O	Load regulation	V_I = 6.3 V, I_O = 5 to 500 mA			2	50	mV
I_d	Quiescent current	V_I = 6 to 20V, I_O = 0mA	ON MODE		0.5	1	mA
		V_I = 6.3 to 20V, I_O=500mA				12	
		V_I = 6 V	OFF MODE		50	100	µA
SVR	Supply voltage rejection	I_O = 5 mA, V_I = 7 ± 1 V	f = 120 Hz		76		dB
			f = 1 kHz		71		
			f = 10 kHz		60		
eN	Output noise voltage	B = 10 Hz to 100 KHz			50		µV
V_d	Dropout voltage	I_O = 200 mA			0.2	0.35	V
		I_O = 500 mA			0.4	0.7	
V_{IL}	Control input logic low	T_a = -40 to 125°C				0.8	V
V_{IH}	Control input logic high	T_a = -40 to 125°C		2			V
I_I	Control input current	V_I = 6 V, V_C = 6 V			10		µA
C_O	Output bypass capacitance	ESR = 0.1 to 10 Ω, I_O = 0 to 500 mA		2	10		µF

Table 9. Electrical characteristics for KF80 (refer to the test circuits, T_J = 25 °C, C_I = 0.1 µF, C_O = 2.2 µF unless otherwise specified.)

Symbol	Parameter	Test conditions		Min.	Typ.	Max.	Unit
V_O	Output voltage	I_O = 50 mA, V_I = 10 V		7.84	8	8.16	V
		I_O = 50 mA, V_I = 10 V, T_a = -25 to 85°C		7.68		8.32	
V_I	Operating input voltage	I_O = 500 mA				20	V
I_O	Output current limit				1		A
ΔV_O	Line regulation	V_I = 9 to 20 V, I_O = 5 mA			4	24	mV
ΔV_O	Load regulation	V_I = 9.3 V, I_O = 5 to 500 mA			2	50	mV
I_d	Quiescent current	V_I = 9 to 20V, I_O = 0mA	ON MODE		0.7	1.5	mA
		V_I = 9.3 to 20V, I_O=500mA				12	
		V_I = 9 V	OFF MODE		70	140	µA
SVR	Supply voltage rejection	I_O = 5 mA, V_I = 10 ± 1 V	f = 120 Hz		72		dB
			f = 1 kHz		67		
			f = 10 kHz		60		
eN	Output noise voltage	B = 10 Hz to 100 KHz			50		µV
V_d	Dropout voltage	I_O = 200 mA			0.2	0.35	V
		I_O = 500 mA			0.4	0.7	
V_{IL}	Control input logic low	T_a = -40 to 125°C				0.8	V
V_{IH}	Control input logic high	T_a = -40 to 125°C		2			V
I_I	Control input current	V_I = 6 V, V_C = 6 V			10		µA
C_O	Output bypass capacitance	ESR = 0.1 to 10 Ω, I_O = 0 to 500 mA		2	10		µF

5 Typical performance characteristics

(unless otherwise specified $V_{O(NOM)}$ = 3.3 V)

Figure 4. Dropout voltage vs output current

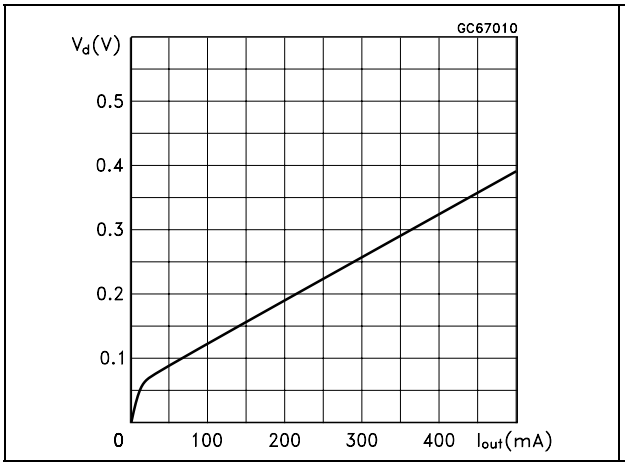

Figure 5. Dropout voltage vs temperature

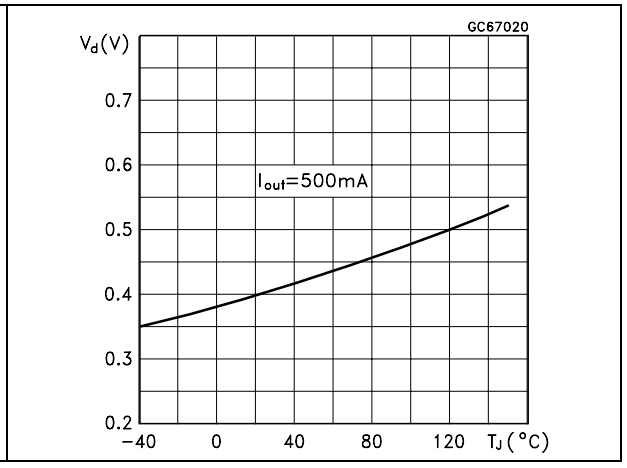

Figure 6. Supply current vs input voltage

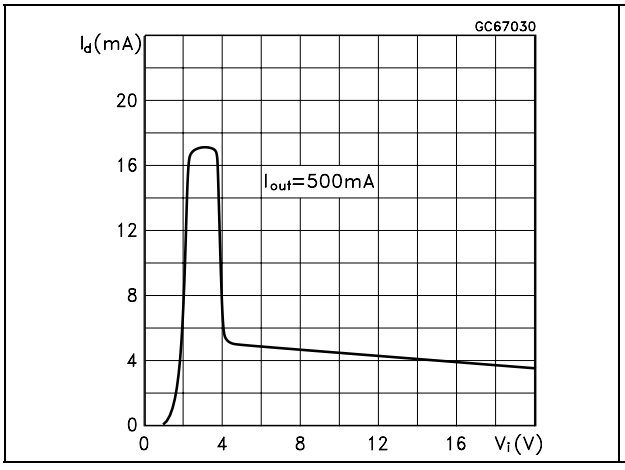

Figure 7. Supply current vs input voltage

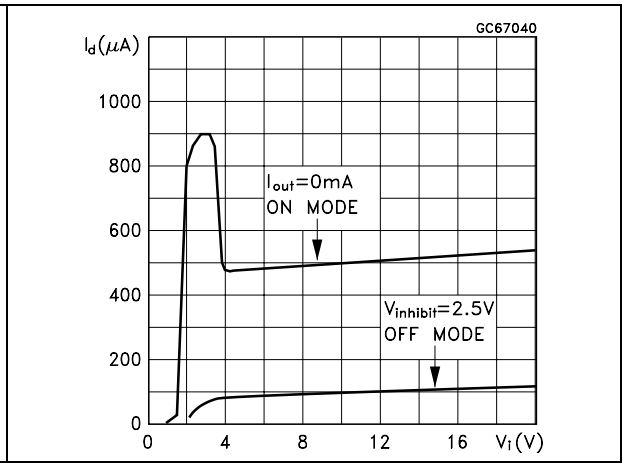

Figure 8. Short circuit current vs input voltage

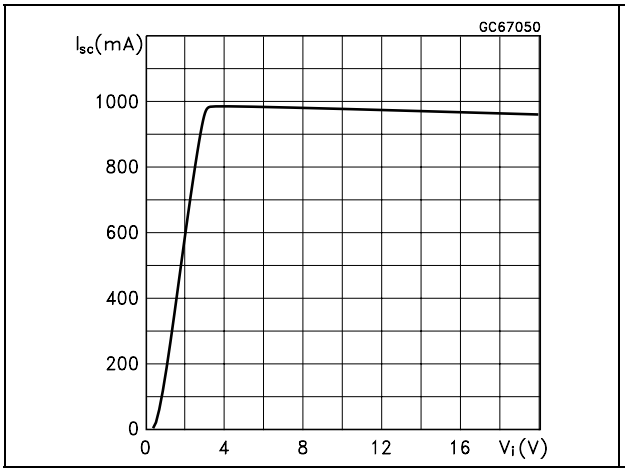

Figure 9. Supply current vs temperature

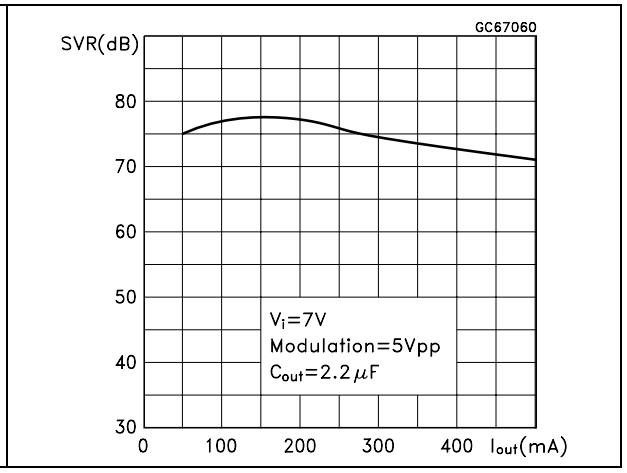

6 Package mechanical data

In order to meet environmental requirements, ST offers these devices in ECOPACK® packages. These packages have a lead-free second level interconnect. The category of second Level Interconnect is marked on the package and on the inner box label, in compliance with JEDEC Standard JESD97. The maximum ratings related to soldering conditions are also marked on the inner box label. ECOPACK is an ST trademark. ECOPACK specifications are available at: www.st.com.

SO-8 mechanical data

Dim.	mm.			inch.		
	Min.	Typ.	Max.	Min.	Typ.	Max.
A	1.35		1.75	0.053		0.069
A1	0.10		0.25	0.04		0.010
A2	1.10		1.65	0.043		0.065
B	0.33		0.51	0.013		0.020
C	0.19		0.25	0.007		0.010
D	4.80		5.00	0.189		0.197
E	3.80		4.00	0.150		0.157
e		1.27			0.050	
H	5.80		6.20	0.228		0.244
h	0.25		0.50	0.010		0.020
L	0.40		1.27	0.016		0.050
k	8° (max.)					
ddd			0.1			0.04

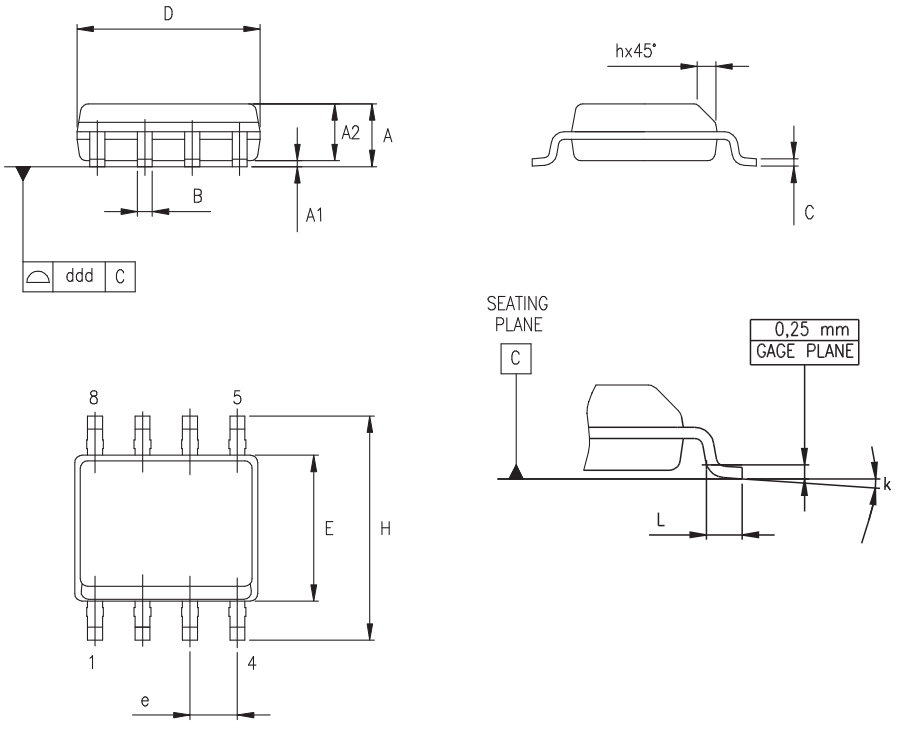

0016023/C

DPAK mechanical data

Dim.	mm.			inch.		
	Min.	Typ.	Max.	Min.	Typ.	Max.
A	2.2		2.4	0.086		0.094
A1	0.9		1.1	0.035		0.043
A2	0.03		0.23	0.001		0.009
B	0.64		0.9	0.025		0.035
b4	5.2		5.4	0.204		0.212
C	0.45		0.6	0.017		0.023
C2	0.48		0.6	0.019		0.023
D	6		6.2	0.236		0.244
D1		5.1			0.200	
E	6.4		6.6	0.252		0.260
E1		4.7			0.185	
e		2.28			0.090	
e1	4.4		4.6	0.173		0.181
H	9.35		10.1	0.368		0.397
L	1			0.039		
(L1)		2.8			0.110	
L2		0.8			0.031	
L4	0.6		1	0.023		0.039
R		0.2			0.008	
V2	0°		8°	0°		8°

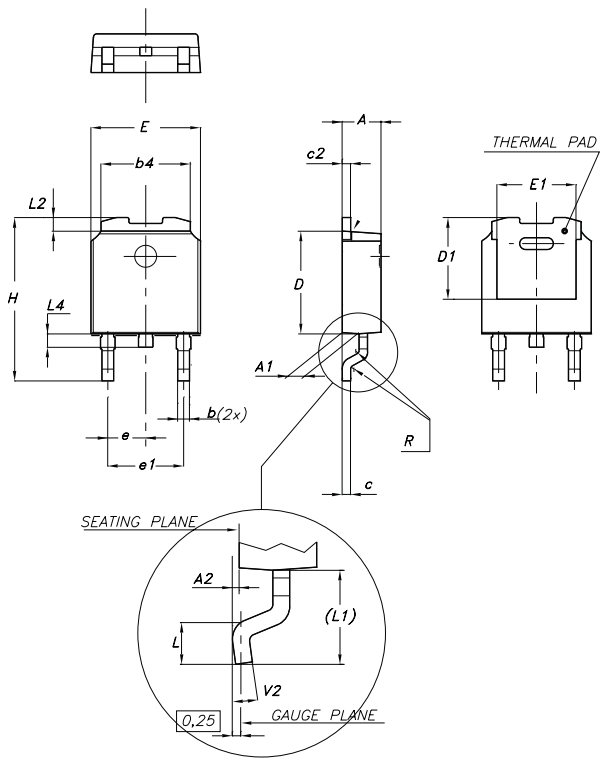

0068772-F

Tape & reel SO-8 mechanical data

Dim.	mm.			inch.		
	Min.	Typ.	Max.	Min.	Typ.	Max.
A			330			12.992
C	12.8		13.2	0.504		0.519
D	20.2			0.795		
N	60			2.362		
T			22.4			0.882
Ao	8.1		8.5	0.319		0.335
Bo	5.5		5.9	0.216		0.232
Ko	2.1		2.3	0.082		0.090
Po	3.9		4.1	0.153		0.161
P	7.9		8.1	0.311		0.319

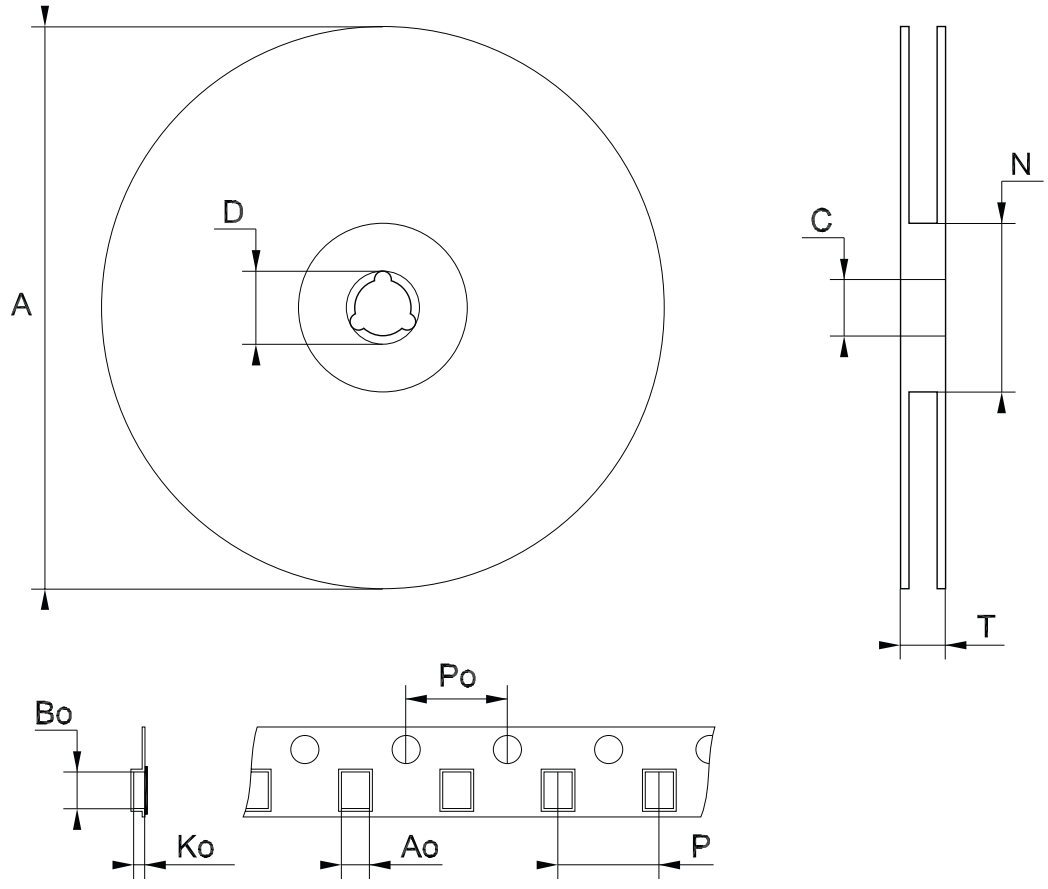

Note: Drawing not in scale

Tape & reel DPAK-PPAK mechanical data

Dim.	mm.			inch.		
	Min.	Typ.	Max.	Min.	Typ.	Max.
A			330			12.992
C	12.8	13.0	13.2	0.504	0.512	0.519
D	20.2			0.795		
N	60			2.362		
T			22.4			0.882
Ao	6.80	6.90	7.00	0.268	0.272	0.2.76
Bo	10.40	10.50	10.60	0.409	0.413	0.417
Ko	2.55	2.65	2.75	0.100	0.104	0.105
Po	3.9	4.0	4.1	0.153	0.157	0.161
P	7.9	8.0	8.1	0.311	0.315	0.319

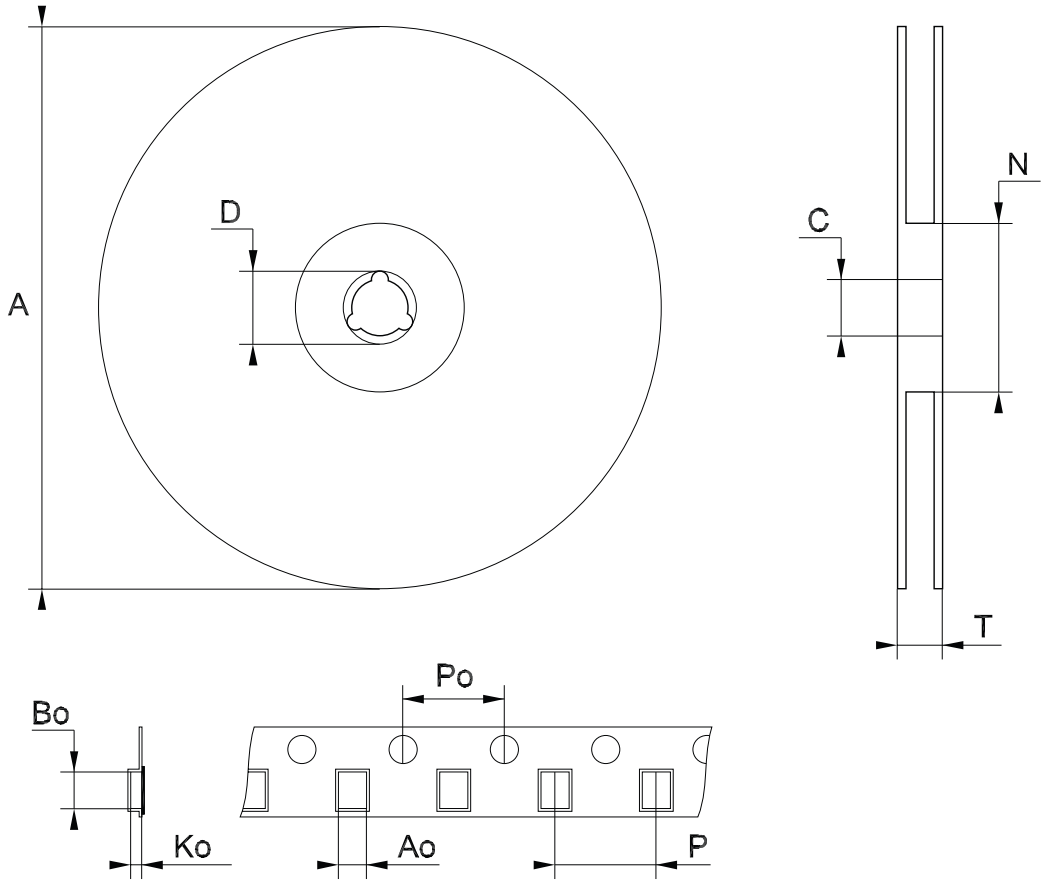

Note: Drawing not in scale

7 Order codes

Table 10. Order codes

Packages		Output voltage
SO-8 (tape and reel)	DPAK (tape and reel)	
	KF15BDT-TR	1.5 V
KF25BD-TR	KF25BDT-TR	2.5 V
KF33BD-TR	KF33BDT-TR	3.3 V
	KF40BDT-TR	4 V
KF50BD-TR	KF50BDT-TR	5 V
	KF80BDT-TR	8 V

8 Revision history

Table 11. Document revision history

Date	Revision	Changes
06-Jun-2007	9	Order codes updated.
14-Dec-2007	10	Modified: *Table 10*.
21-Feb-2008	11	Modified: *Table 10 on page 18*.

Please Read Carefully:

Information in this document is provided solely in connection with ST products. STMicroelectronics NV and its subsidiaries (“ST”) reserve the right to make changes, corrections, modifications or improvements, to this document, and the products and services described herein at any time, without notice.

All ST products are sold pursuant to ST’s terms and conditions of sale.

Purchasers are solely responsible for the choice, selection and use of the ST products and services described herein, and ST assumes no liability whatsoever relating to the choice, selection or use of the ST products and services described herein.

No license, express or implied, by estoppel or otherwise, to any intellectual property rights is granted under this document. If any part of this document refers to any third party products or services it shall not be deemed a license grant by ST for the use of such third party products or services, or any intellectual property contained therein or considered as a warranty covering the use in any manner whatsoever of such third party products or services or any intellectual property contained therein.

UNLESS OTHERWISE SET FORTH IN ST’S TERMS AND CONDITIONS OF SALE ST DISCLAIMS ANY EXPRESS OR IMPLIED WARRANTY WITH RESPECT TO THE USE AND/OR SALE OF ST PRODUCTS INCLUDING WITHOUT LIMITATION IMPLIED WARRANTIES OF MERCHANTABILITY, FITNESS FOR A PARTICULAR PURPOSE (AND THEIR EQUIVALENTS UNDER THE LAWS OF ANY JURISDICTION), OR INFRINGEMENT OF ANY PATENT, COPYRIGHT OR OTHER INTELLECTUAL PROPERTY RIGHT.

UNLESS EXPRESSLY APPROVED IN WRITING BY AN AUTHORIZE REPRESENTATIVE OF ST, ST PRODUCTS ARE NOT DESIGNED, AUTHORIZED OR WARRANTED FOR USE IN MILITARY, AIR CRAFT, SPACE, LIFE SAVING, OR LIFE SUSTAINING APPLICATIONS, NOR IN PRODUCTS OR SYSTEMS, WHERE FAILURE OR MALFUNCTION MAY RESULT IN PERSONAL INJURY, DEATH, OR SEVERE PROPERTY OR ENVIRONMENTAL DAMAGE.

Resale of ST products with provisions different from the statements and/or technical features set forth in this document shall immediately void any warranty granted by ST for the ST product or service described herein and shall not create or extend in any manner whatsoever, any liability of ST.

ST and the ST logo are trademarks or registered trademarks of ST in various countries.

Information in this document supersedes and replaces all information previously supplied.

The ST logo is a registered trademark of STMicroelectronics. All other names are the property of their respective owners.

© 2008 STMicroelectronics - All rights reserved

STMicroelectronics group of companies

Australia - Belgium - Brazil - Canada - China - Czech Republic - Finland - France - Germany - Hong Kong - India - Israel - Italy - Japan - Malaysia - Malta - Morocco - Singapore - Spain - Sweden - Switzerland - United Kingdom - United States of America

www.st.com